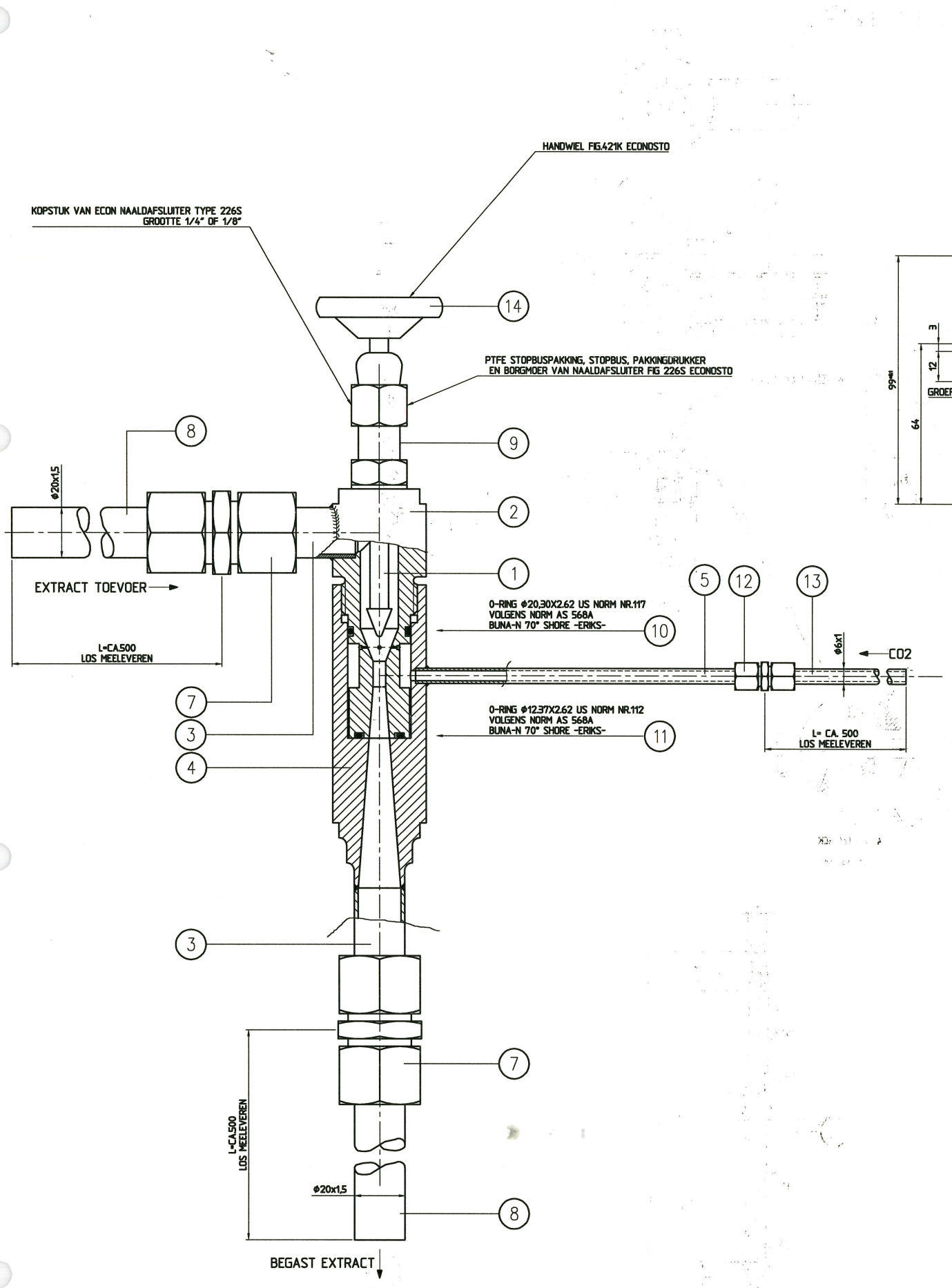

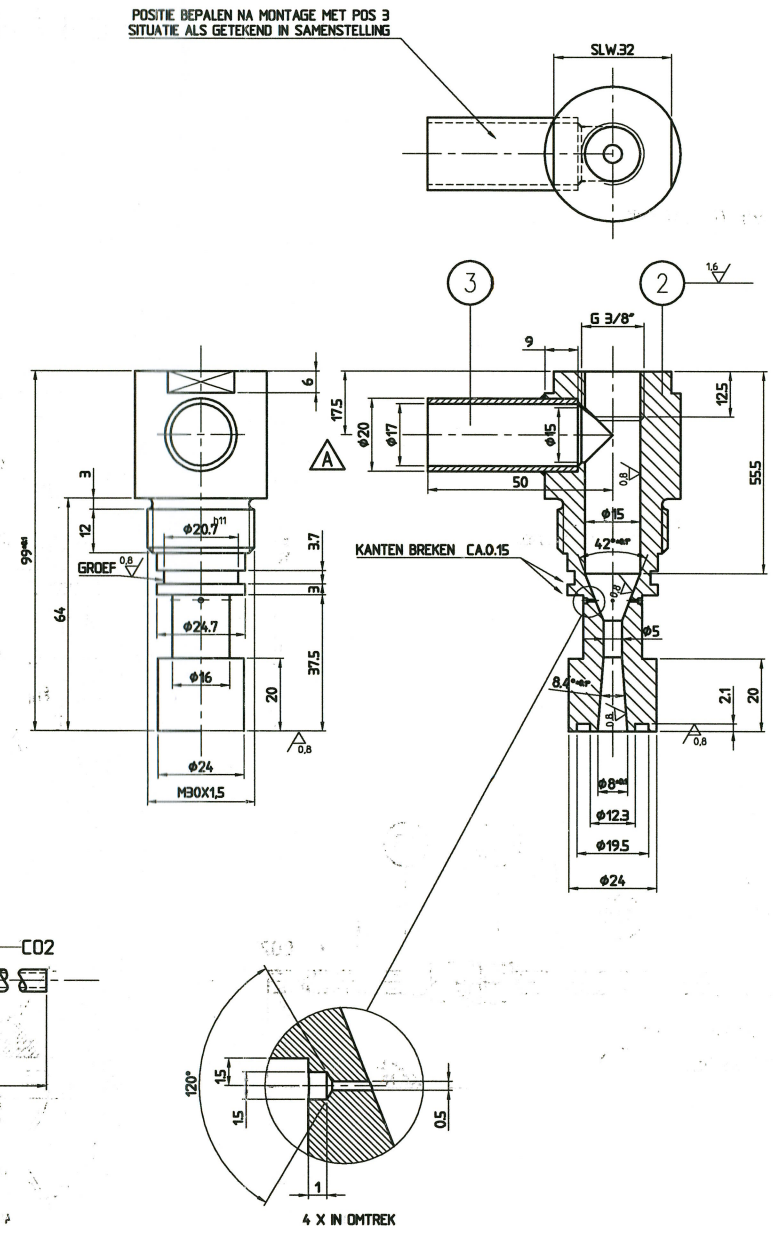

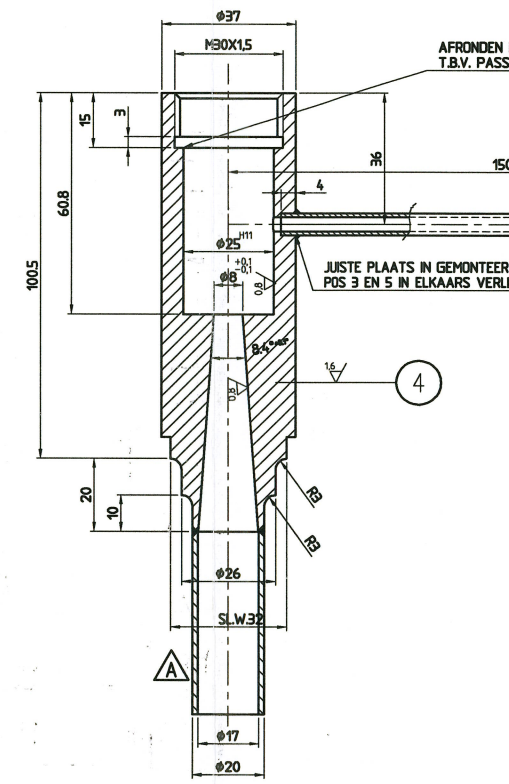

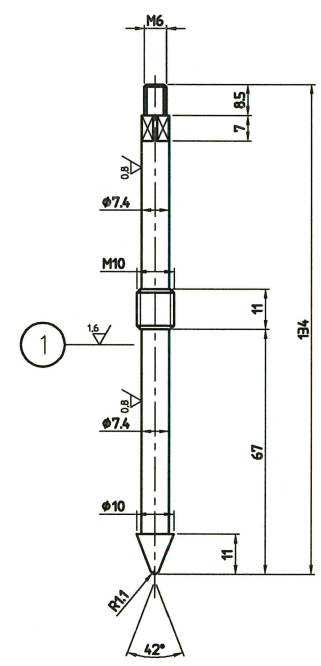

P max. 60
BEDRIJFSDR
MATERIAAL:

pipedia., union and body		
Modification		
FACTORY :	COFFEE – SUFFOLK – USA	
PROCESS :	SPRAYDRYER	
PART :	INJECTOR CARBONIC ACID GA	
SCALE : 1:1	GROUP: 103	
AUT.: R. Wink	Date: 19-02-'02	
CHK.: RW	Date:	
MOD.: R. Wink	Date: 27-03-'02	

Ope
Man
All ri
or di
docur
writte